Work Order ID 69834

Thursday, May 19, 2011 3:38:10 PM

Item ID: D2512 **Accept** **Setup Start** **Stop**

Revision ID:

Item Name: Basket Lid 205/350

Start Date: 5/20/2011 **Start Qty:** 1.00 **Cust Item ID:**

Required Date: 6/3/2011 **Req'd Qty:** 1.00 **Customer:**

Reference:

Approvals: **Process Plan:** MF **Date:** 11-05-20 **Tooling:** **Date:** **Run Start** **Stop**

QC: **Date:** **SPC (Y/N):** **Date:**

Sequence ID/ Work Center ID	Operation Description	Set Up/ Run Hours	Tool ID	Tool #	Plan Code	Accept Qty	Reject Qty	Reject Number	Insp. Stamp

Draw Nbr	Revision Nbr
D2512	Rev E

100 Weld per dwg A/R S.S. rod Batch: M115778 0.00

Large Fab

Large Fab

Large Fab

Memo 0.00

1-Cut 3/4" x 3/4" square tubing as per Dwg D2512
2-Cut (4) D2236 From D3166-3
3-Drill holes in D2512-1 as per Dwg D2512 using Drill Jig DT8305
4-Weld as per Dwg D2512 using Welding Jig DT 9436
Deburr as required
INSTALL D2012-117 CLEVIS ONLY ON D130-701-041

11.06.07

110 QC9- Inspect visual per QSI004- Fusion Welds 0.00

QC

Quality Control

Memo 0.00

1 0 11/06/07

11.06.07

Dart Aerospace Ltd

W/O:		WORK ORDER CHANGES					
DATE	STEP	PROCEDURE CHANGE	By	Date	Qty	Approval Chief Eng / Prod Mgr	Approval QC Inspector

Part No: _____ **PAR #:** _____ **Fault Category:** _____ **NCR:** Yes No **DQA:** _____ **Date:** _____

Resolution: _____ **Disposition:** _____ **QA: N/C Closed:** _____ **Date:** _____

NCR:		WORK ORDER NON-CONFORMANCE (NCR)						
DATE	STEP	Description of NC Section A	Corrective Action Section B			Verification Section C	Approval Chief Eng	Approval QC Inspector
			Initial Chief Eng	Action Description Chief Eng	Sign & Date			

NOTE: Date & initial all entries

Work Order ID 69834

Thursday, May 19, 2011 3:38:10 PM

Item ID: D2512 **Accept** **Setup Start**

Revision ID: **Stop**

Item Name: Basket Lid 205/350

Start Date: 5/20/2011 **Start Qty:** 1.00 **Cust Item ID:**

Required Date: 6/3/2011 **Req'd Qty:** 1.00 **Customer:**

Reference:

Run Start

Approvals: **Process Plan:** _____ **Date:** _____ **Tooling:** _____ **Date:** _____

Stop

QC: _____ **Date:** _____ **SPC (Y/N):** _____ **Date:** _____

Sequence ID/ Work Center ID	Operation Description	Set Up/ Run Hours	Tool ID	Tool #	Plan Code	Accept Qty	Reject Qty	Reject Number	Insp. Stamp
120	QC6- Inspect dimensions to drawing	0.00							
QC	Memo	0.00							
Quality Control									
125	Pressure Wash per QSI005 4.3	0.00							
HandFinish	Memo	0.00							
Hand Finishing									

Subcon

11/06/07

Dart Aerospace Ltd

W/O:		WORK ORDER CHANGES					
DATE	STEP	PROCEDURE CHANGE	By	Date	Qty	Approval Chief Eng / Prod Mgr	Approval QC Inspector

Part No: _____ **PAR #:** _____ **Fault Category:** _____ **NCR:** Yes No **DQA:** _____ **Date:** _____

Resolution: _____ **Disposition:** _____ **QA: N/C Closed:** _____ **Date:** _____

NCR:		WORK ORDER NON-CONFORMANCE (NCR)						
DATE	STEP	Description of NC Section A	Corrective Action Section B			Verification Section C	Approval Chief Eng	Approval QC Inspector
			Initial Chief Eng	Action Description Chief Eng	Sign & Date			

NOTE: Date & initial all entries

H:\fFORMS\Quality Assurance\approved QA\NCRWO RevE

Work Order ID 69834

Thursday, May 19, 2011 3:38:10 PM

Item ID: D2512 **Accept** **Setup Start**

Revision ID: **Stop**

Item Name: Basket Lid 205/350

Start Date: 5/20/2011 **Start Qty:** 1.00 **Cust Item ID:**

Required Date: 6/3/2011 **Req'd Qty:** 1.00 **Customer:**

Reference:

Run Start

Approvals: **Process Plan:** _____ **Date:** _____ **Tooling:** _____ **Date:** _____

Stop

QC: _____ **Date:** _____ **SPC (Y/N):** _____ **Date:** _____

Sequence ID/ Work Center ID	Operation Description	Set Up/ Run Hours	Tool ID	Tool #	Plan Code	Accept Qty	Reject Qty	Reject Number	Insp. Stamp
130	White Gloss(Ref:4.3.5.1) per QSI005 4.3-Alum	0.00							
Powdercoat	**Memo**	0.00							
Powder Coating	1- Plug holes in D2581 and in D2327-1 bushing prior to Powdercoat 1ST COAT: START TIME: 2:15 OVEN TEMPERATURE: 400 oF FINISH TIME: 2:45 2ND COAT: START TIME: OVEN TEMPERATURE: FINISH TIME:								
140	HandFinishing	0.00							
HandFinish	**Memo**	0.00							
Hand Finishing	Wing Work and Spray Paint black as per Dwg D2512 and QSI 005 4.4 Batch ~~M117815~~ M117162								

M116964

IX Ø M-p 11/06/07

1 BR 11-6-8

Dart Aerospace Ltd

W/O:		WORK ORDER CHANGES					
DATE	STEP	PROCEDURE CHANGE	By	Date	Qty	Approval Chief Eng / Prod Mgr	Approval QC Inspector

Part No: _____ **PAR #:** _____ **Fault Category:** _____ **NCR:** Yes No **DQA:** _____ **Date:** _____

Resolution: _____ **Disposition:** _____ **QA: N/C Closed:** _____ **Date:** _____

NCR:		WORK ORDER NON-CONFORMANCE (NCR)						
DATE	STEP	Description of NC Section A	Corrective Action Section B			Verification Section C	Approval Chief Eng	Approval QC Inspector
			Initial Chief Eng	Action Description Chief Eng	Sign & Date			

NOTE: Date & initial all entries

Work Order ID 69834

Thursday, May 19, 2011 3:38:10 PM

Item ID: D2512
Revision ID:
Item Name: Basket Lid 205/350
Start Date: 5/20/2011 **Start Qty:** 1.00
Required Date: 6/3/2011 **Req'd Qty:** 1.00
Reference:

Accept

Setup Start
Stop

Cust Item ID:
Customer:

Run Start
Stop

Approvals: **Process Plan:** _____ **Date:** _____ **Tooling:** _____ **Date:** _____
QC: _____ **Date:** _____ **SPC (Y/N):** _____ **Date:** _____

Sequence ID/ Work Center ID	Operation Description	Set Up/ Run Hours	Tool ID	Tool #	Plan Code	Accept Qty	Reject Qty	Reject Number	Insp. Stamp
150	QC3- Inspect Part Finish	0.00							
QC	Memo	0.00							
Quality Control									
160	Identify as per dwg & Stock Location: G.A. W/O 69829	0.00							
Packaging	Memo	0.00							
Packaging									
170	QC21- Final Inspection - Work Order Release	0.00							
QC	Memo	0.00							
Quality Control									

1 - 0 11/06/08

11/06/08

11/6/98

MF

11-06-08

Dart Aerospace Ltd

W/O:		WORK ORDER CHANGES					
DATE	STEP	PROCEDURE CHANGE	By	Date	Qty	Approval Chief Eng / Prod Mgr	Approval QC Inspector

Part No: _____ **PAR #:** _____ **Fault Category:** _____ **NCR:** Yes No **DQA:** _____ **Date:** _____

Resolution: _____ **Disposition:** _____ **QA: N/C Closed:** _____ **Date:** _____

NCR:		WORK ORDER NON-CONFORMANCE (NCR)						
DATE	STEP	Description of NC Section A	Corrective Action Section B			Verification Section C	Approval Chief Eng	Approval QC Inspector
			Initial Chief Eng	Action Description Chief Eng	Sign & Date			

NOTE: Date & initial all entries

Picklist Print

Thursday, May 19, 2011 3:38:05 PM

Work Order ID: 69834

Parent Item: D2512

Parent Item Name: Basket Lid 205/350

Start Date: 5/20/2011 **Required Date:** 6/3/2011

Start Qty: 1.00 **Required Qty:** 1.00

Comments: Rev IPP:M03.01.31 AddedD2012-117forD130-701-041□KJ/RF
IPP Rev:N□06.04.05 Added level21 EC
IPP REV:O ADDED D3490-1/-3 FOR D130-701-011/-043 10-04-20 JLM
VERIFIED BY:DD
IPP Rev:P 08-08-29 revE as per dwg DD verified by:EC
IPP Rev:Q 08-09-24 plug holes prior to powder coating DD verified by:EC IPP Rev:R 10.06.29
added pressure wash DD verf:EC

Component Item ID/ Item Name	Replacement Item ID	Mfg/ Purch	Bin Item	Primary Location	Last Location	Route Seq ID	Unit of Measure	Qty on Hand	Qty per Kit	Total Qty	Qty Issued	Date Issued	Status
D2012-117		Manufactured	No			100	Each	20.0000	2	2		11.06.02	
Clevis													
				Location			**Loc Qty**		**Loc Code**				
				WA005			20						
					55729		20			2			
*** ONLY APPLICABLE ON D130-701-041 -IF NOT USED, PLEASE MARK N/A ***													
D2232-I		Manufactured	No			100	Each	4.0000	2	2		11.06.02	
Basket Hinge													
				Location			**Loc Qty**		**Loc Code**				
				WA005			4						
					55791		4			2			
D2327-I		Manufactured	No			100	Each	19.0000	2	2		11.06.02	
Spacer Bushing													
				Location			**Loc Qty**		**Loc Code**				
				WA005			19						
					64899		19			2			

Dart Aerospace Ltd

W/O:		WORK ORDER CHANGES					
DATE	STEP	PROCEDURE CHANGE	By	Date	Qty	Approval Chief Eng / Prod Mgr	Approval QC Inspector

Part No: _____ **PAR #:** _____ **Fault Category:** _____ **NCR:** Yes No **DQA:** _____ **Date:** _____

Resolution: _____ **Disposition:** _____ **QA: N/C Closed:** _____ **Date:** _____

NCR:		WORK ORDER NON-CONFORMANCE (NCR)						
DATE	STEP	Description of NC Section A	Corrective Action Section B			Verification Section C	Approval Chief Eng	Approval QC Inspector
			Initial Chief Eng	Action Description Chief Eng	Sign & Date			

NOTE: Date & initial all entries

Picklist Print

Thursday, May 19, 2011 3:38:05 PM

Work Order ID: 69834

Parent Item: D2512

Parent Item Name: Basket Lid 205/350

Start Date: 5/20/2011 **Required Date:** 6/3/2011

Start Qty: 1.00 **Required Qty:** 1.00

D2506	Manufactured	No	100	Each	10.0000	1	1	11.06.02
Label Plate								

Location	Loc Qty	Loc Code
WA	10	
69262	10	

D2581	Manufactured	No	100	Each	56.0000	2	2	11.06.02
Mounting Bracket								

Location	Loc Qty	Loc Code
WA	56	
68964	28	
69258	28	

D3166-3	Manufactured	No	100	Each	0.8625	1	1	11.06.02
Basket Hoop								

B68442 (1X)

Location	Loc Qty	Loc Code
WA007	0.86250527	
64928	0.86250527	

M304EX0.75-16F	Purchased	No	100	sf	548.2978	18	18.94737	11.06.07
Expanded Metal Flat SS								

Location	Loc Qty	Loc Code
MAT	251.1053	
117708	251.1053	18.94737
WA	297.1925	
115012	114	
117197	167.1584	
117455	16.0341	

Dart Aerospace Ltd

W/O:		WORK ORDER CHANGES					
DATE	STEP	PROCEDURE CHANGE	By	Date	Qty	Approval Chief Eng / Prod Mgr	Approval QC Inspector

Part No: _____ **PAR #:** _____ **Fault Category:** _____ **NCR:** Yes No **DQA:** _____ **Date:** _____

Resolution: _____ **Disposition:** _____ **QA: N/C Closed:** _____ **Date:** _____

NCR:		WORK ORDER NON-CONFORMANCE (NCR)						
DATE	STEP	Description of NC Section A	Corrective Action Section B			Verification Section C	Approval Chief Eng	Approval QC Inspector
			Initial Chief Eng	Action Description Chief Eng	Sign & Date			

NOTE: Date & initial all entries

H:\FORMS\Quality Assurance\approved QA\NCRWO RevE

Picklist Print

Thursday, May 19, 2011 3:38:06 PM

Work Order ID: 69834

Parent Item: D2512

Parent Item Name: Basket Lid 205/350

Start Date: 5/20/2011 **Required Date:** 6/3/2011

Start Qty: 1.00 **Required Qty:** 1.00

M304TS0.750W.065	Purchased	No	100	f	1,368.194	43.5804	45.87411

304 SQ Tube .75x.75x.065W

11.06.02

Location	Loc Qty	Loc Code
MAT018	1140.8565	
117598	1000	
117636	140.8565	
WA007	227.3381906	
116267	162.707172	
116763	64.6310186	

Dart Aerospace Ltd

W/O:		WORK ORDER CHANGES					
DATE	STEP	PROCEDURE CHANGE	By	Date	Qty	Approval Chief Eng / Prod Mgr	Approval QC Inspector

Part No: _____ PAR #: _____ Fault Category: _____ NCR: Yes No DQA: _____ Date: _____

Resolution: _____ Disposition: _____ QA: N/C Closed: _____ Date: _____

NCR:		WORK ORDER NON-CONFORMANCE (NCR)						
DATE	STEP	Description of NC Section A	Corrective Action Section B			Verification Section C	Approval Chief Eng	Approval QC Inspector
			Initial Chief Eng	Action Description Chief Eng	Sign & Date			

NOTE: Date & initial all entries

H:\fFORMS\Quality Assurance\approved QA\NCRWO RevE

PARTS LIST FOR D2512 BASKET LID ASSEMBLY

PART NO	QUANTITY	LENGTH A	LENGTH B	DESCRIPTION
D2512-1	2	———	25.50	RIB
D2512-3	2	———	95.30	RIB
D2512-5	6	30.84	———	RIB
D2512-7	3	30.63	———	RIB
D2232-1	2	N/A	N/A	HINGE PLATE
D2236	4	N/A	N/A	RIB
D2327-1	2	N/A	N/A	BUSHING
D2506	1	N/A	N/A	LABEL PLATE
D2581	2	N/A	N/A	MOUNTING BRACKET

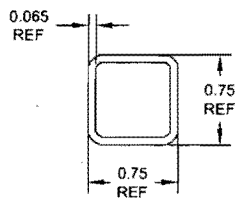

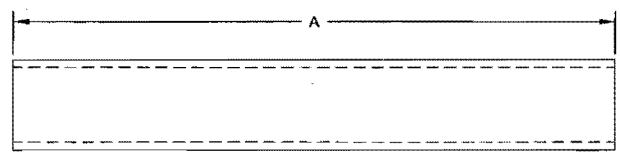

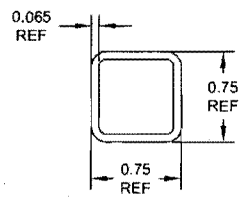

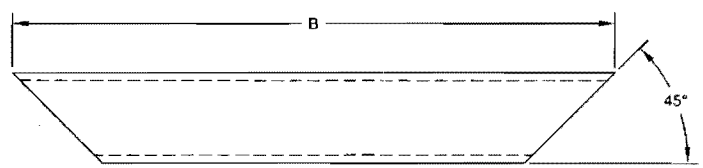

#69834

RELEASED
08.08.21

E

D2512-1/-3/-5/-7 NOTES:

1) MATERIAL: AISI 304/316 SS, 3/4 X 3/4 X 0.065 WALL SQUARE TUBING
REF. DART SPEC M304TS0.750W.065
2) FINISH: N/A
3) TOLERANCES: PER DART QSI 018 UNLESS OTHERWISE NOTED
4) UNITS: INCHES UNLESS OTHERWISE NOTED
5) BREAK SHARP EDGES: 0.005 TO 0.010 MAX
6) IDENTIFICATION: NONE
7) WEIGHT: N/A
8) CUT LENGTH/SHAPE PER DIAGRAM AND PARTS LIST

REV.	DESCRIPTION	BY	DATE
E	INCORPORATED D1 & D2. MATERIAL FOR -1, -3, -5, & -7 WAS 0.060 WALL. SHT 3 ZN C4 TOLERANCE REMOVED FROM 95.30 DIM. DRAWING TRANSFERED TO "B" FORMAT AND UPADTED TO CURRENT STANDARDS. SHT 3 VIEWS INVERTED FOR CLARITY. SHT 2 MESH MATERIAL CALLOUT UPDATED.	AJS	08.06.17
D	CHANGE HINGE	CP	01.04.19
C	REMOVE DOUBLE SKIN SECTION, ADDED MEMBERS, INCORP DEO 9074	DS	99.07.06
B	ADDED LATCH CHANNEL & LABEL PLATE	BW	96.05.24
A	NEW ISSUE	BW	95.11.21

DESIGN	BW	**DART AEROSPACE LTD** HAWKESBURY, ONTARIO, CANADA	
DRAWN	AJS		
CHECKED		DRAWING NO.	REV. E
MFG. APPR.		D2512	SHEET 1 OF 4
APPROVED		TITLE	SCALE
DE APPR.		BASKET LID ASSEMBLY (350/212)	NTS
DATE	08.06.17		

COPYRIGHT © 1995 BY DART AEROSPACE LTD
THIS DOCUMENT IS PRIVATE AND CONFIDENTIAL AND IS SUPPLIED ON THE EXPRESS CONDITION THAT IT IS NOT TO BE USED FOR ANY PURPOSE OR COPIED OR COMMUNICATED TO ANY OTHER PERSON WITHOUT WRITTEN PERMISSION FROM DART AEROSPACE LTD

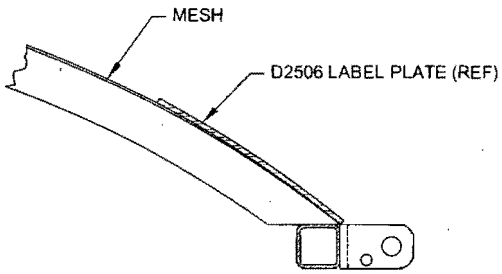

SECTION A-A B3-2
(ROTATED 90° CCW)

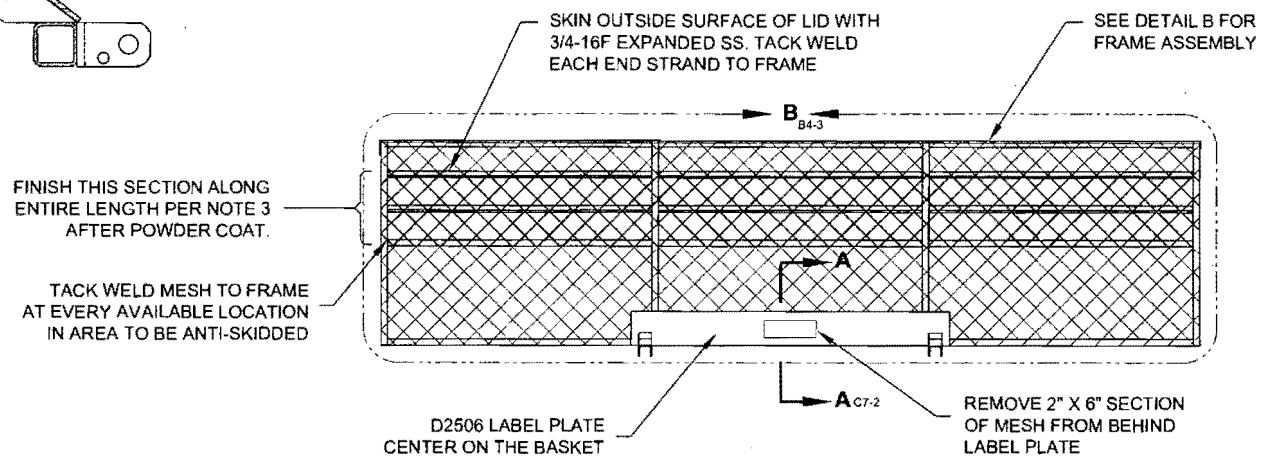

#69834

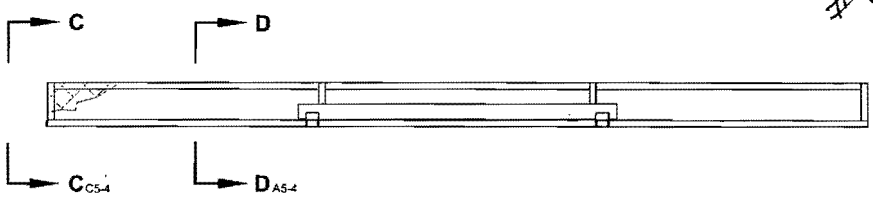

RELEASED 05.05.21

E

D2512 BASKET LID ASSEMBLY NOTES:

1) MESH MATERIAL: 3/4-16F EXPANDED SS
REF DART SPEC M304EX0.75-16F
2) FINISH: POWDER COAT ENTIRE ASSEMBLY WHITE (4.3.5.2) PER DART QSI 005 4.3
3) SPRAY PAINT BLACK INSIDE SURFACE
APPLY BLACK ANTI-SKID TO OUTSIDE SURFACE PER DART QSI 005 4.4
4) TOLERANCES: PER DART QSI 018 UNLESS OTHERWISE NOTED
5) UNITS: INCHES UNLESS OTHERWISE NOTED
6) BREAK SHARP EDGES: N/A
7) IDENTIFICATION: NONE
8) WEIGHT: N/A
9) WELD PER DART QSI 004

DESIGN	BW	**DART AEROSPACE LTD** HAWKESBURY, ONTARIO, CANADA
DRAWN	AJS	
CHECKED		DRAWING NO. D2512 — REV. E — SHEET 2 OF 4
MFG. APPR.		
APPROVED		TITLE: BASKET LID ASSEMBLY (350/212) — SCALE: NTS
DE APPR.		
DATE	08.06.17	

COPYRIGHT © 1995 BY DART AEROSPACE LTD
THIS DOCUMENT IS PRIVATE AND CONFIDENTIAL AND IS BURNED ON THE EXPRESS CONDITION THAT IT IS NOT TO BE USED FOR ANY PURPOSE OR COPIED OR COMMUNICATED TO ANY OTHER PERSON WITHOUT WRITTEN PERMISSION FROM DART AEROSPACE LTD

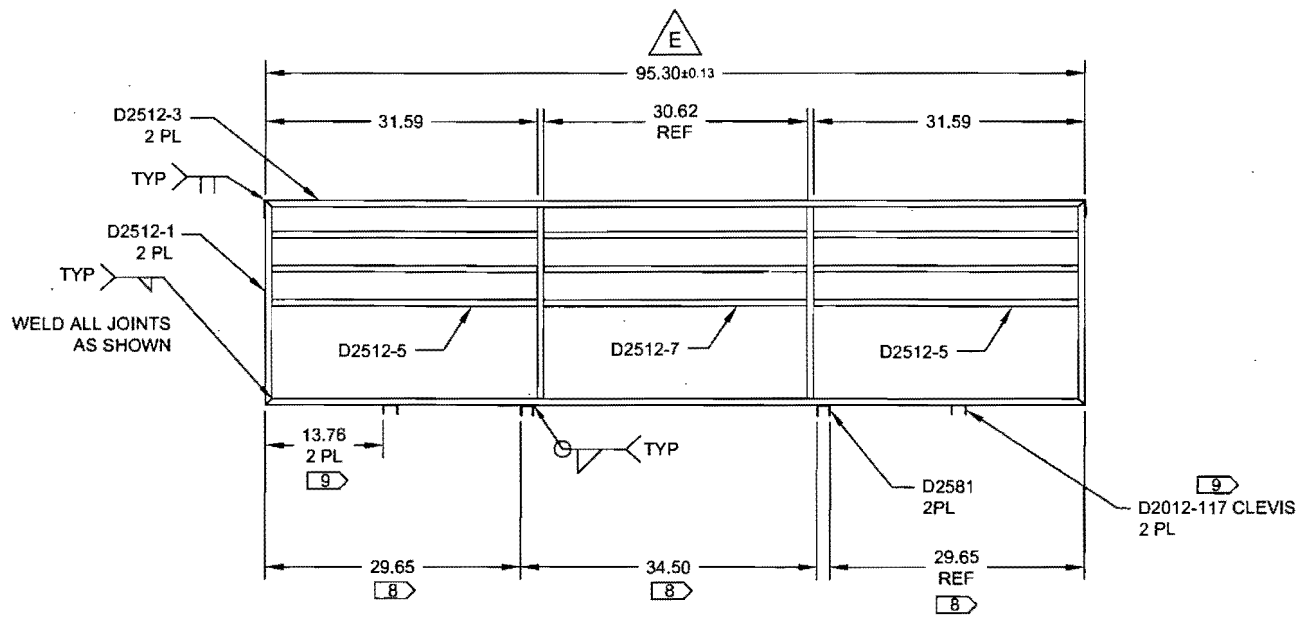

DETAIL B C3-2

FRAMEWORK ONLY SHOWN FOR CLARITY

#69834

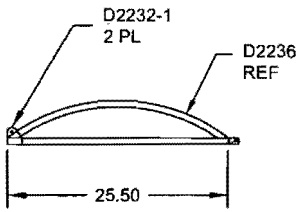

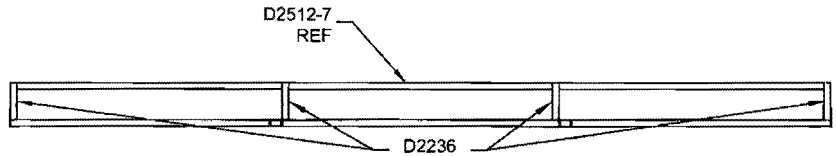

RELEASED 08.06.21

NOTES:

1) MATERIAL: NONE
2) FINISH: NONE
3) TOLERANCES: PER DART QSI 018 UNLESS OTHERWISE NOTED
4) UNITS: INCHES UNLESS OTHERWISE NOTED
5) BREAK SHARP EDGES: N/A
6) IDENTIFICATION: NONE
7) WEIGHT: N/A
8) LOCATE IN CONJUNCTION WITH ADJACENT D2581 ON BASKET BASE ASSEMBLY
9) FOR D130-701-041 ONLY

DESIGN	BW	**DART AEROSPACE LTD** HAWKESBURY, ONTARIO, CANADA
DRAWN	AJS	
CHECKED		DRAWING NO. REV. E
MFG. APPR.		D2512 SHEET 3 OF 4
APPROVED		TITLE SCALE
DE APPR.		BASKET LID ASSEMBLY (350/212) NTS
DATE	08.06.17	

COPYRIGHT © 1995 BY DART AEROSPACE LTD
THIS DOCUMENT IS PRIVATE AND CONFIDENTIAL AND IS SUPPLIED ON THE EXPRESS CONDITION THAT IT IS NOT TO BE USED FOR ANY PURPOSE OR COPIED OR COMMUNICATED TO ANY OTHER PERSON WITHOUT WRITTEN PERMISSION FROM DART AEROSPACE LTD.

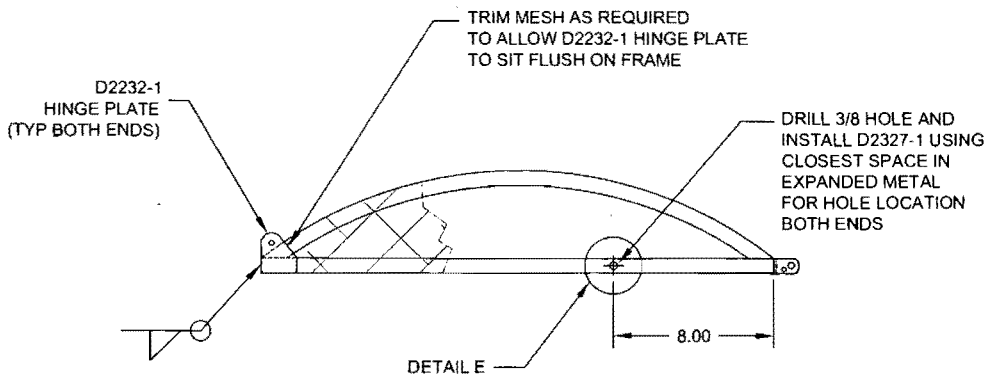

VIEW C-C SIMILAR BOTH END RIBS A5-2

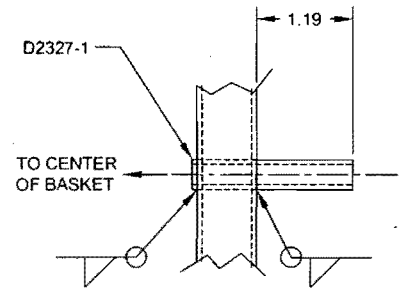

DETAIL E C6-4

#69834

RELEASED

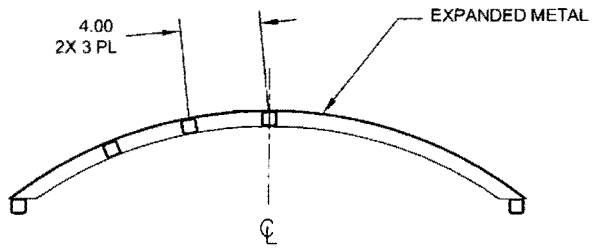

SECTION D-D SAME BOTH CENTER RIBS A4-2

DESIGN	BW	**DART AEROSPACE LTD** HAWKESBURY, ONTARIO, CANADA
DRAWN	AJS	
CHECKED		DRAWING NO. D2512 — REV. E — SHEET 4 OF 4
MFG. APPR.		
APPROVED		TITLE: BASKET LID ASSEMBLY (350/212) — SCALE: NTS
DE APPR.		
DATE	08.06.17	

COPYRIGHT © 1995 BY DART AEROSPACE LTD
THIS DOCUMENT IS PRIVATE AND CONFIDENTIAL AND IS SUPPLIED ON THE EXPRESS CONDITION THAT IT IS NOT TO BE USED FOR ANY PURPOSE, OR COPIED OR COMMUNICATED TO ANY OTHER PERSON WITHOUT WRITTEN PERMISSION FROM DART AEROSPACE LTD